Electrolux PROFESSIONAL

Premium Preparation Sink Unit with 2 Bowls - Left Drain

ITEM #

MODEL #

NAME #

SIS #

AIA #

132941 (LR2SSPEP)	Sink Unit with 2 bowls 500x500x290 mm and left drainer

Short Form Specification

Item No.

The 50mm high worktop in 304 AISI stainless steel, 1,2mm in thickness, is sound-deadened and has an overflow rim and welded corners. Integral rear upstand, h=100mm, with 10mm radius. All-round apron panelling in 304 AISI st/st (except where the dishwasher is placed). Lower shelf placed under the bowls. Round section legs and feet in 304 AISI stainless steel, 50mm in diameter. Height-adjustable feet (+0-50mm).
N. 2 bowls mm500x500x300h with overflow pipe and 2" drain hole; drainer (on the left hand side) with void under space to lodge an udercounter dishwasher.

APPROVAL:

Main Features

- Sturdiness, stability and reliability of table accurately tested.

Construction

- 50 mm thick lower shelf, in 304 AISI stainless steel, can be easily slotted into position, 200 mm from the floor.
- Bottom part of drain left free to house an undercounter dishwasher.
- Wide range of taps are available to suit every need.
- Drainage area suitable for drying operations
- Round section legs with feet in 304 AISI stainless steel, 50 mm in diameter, adjustable in height by +0/-40 mm.
- 100 mm upstand with 10 mm radioused corner and 13 mm deep, designed to be used against a wall.
- Heavy duty construction entirely in AISI 304 stainless steel to offer maximum durability.

Optional Accessories

- Double plastic drain syphon 2 " for sinks PNC 850022 ❑
- Lower shelf for 1200mm for units PNC 855282 ❑
- 3-sided underframe for 1200mm tables PNC 855290 ❑
- Wheel kit for cupboards, 4 wheels (2 with brakes), D=100 mm PNC 855299 ❑
- Maxi reel retractable hose spray unit, 10m PNC 855320 ❑
- Maxi reel retractable hose spray unit, 15m PNC 855321 ❑
- Elbow operated mixer tap with spout 3/4", single hole PNC 855322 ❑
- Elbow operated mixer tap with short spout 3/4", single hole PNC 855323 ❑
- Maxi reel rectractable hose spray unit, 6m PNC 855327 ❑
- Foot operated mixer tap (hot and cold) with spout 3/4'' PNC 855328 ❑
- False bottom for right and left hand 500x500 mm bowl PNC 895200 ❑
- Single plastic drain syphon 2" for Sinks PNC 895313 ❑

Premium Preparation
Sink Unit with 2 Bowls - Left Drain

Front

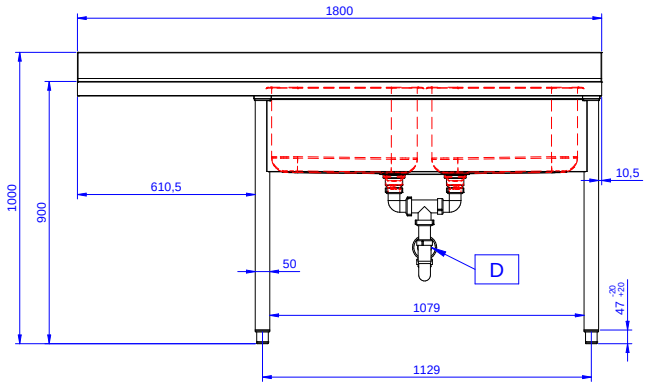

Side

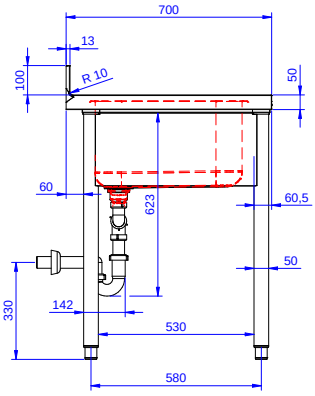

D = Drain

Top

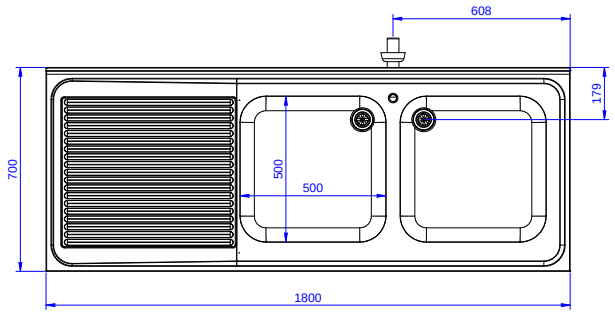

Key Information:

External dimensions, Width:	
132941 (LR2SSPEP)	1800 mm
External dimensions, Depth:	700 mm
External dimensions, Height:	900 mm
Upstand Dimensions, Height:	100 mm
Upstand Dimensions, Depth:	13 mm
Upstand Dimensions, Radius:	R=10
Bowls number	2
Bowl dimensions	500x500xH300
Worktop thickness:	50 mm
Net weight:	80 kg

The company reserves the right to make modifications to the products without prior notice. All information correct at time of printing.

2026.03.09